CBSS1-Ex d

Ex d IIB T6 / Ex tD A21 T85℃

Shear Beam Load Cell

0.5, 1, 2, 3, 5 tf

FEATURES

- Stainless steel construction
- Fully environmental protection

Material

- Stainless steel construction

Cable

- Braided shield 4-wire round cable with PVC - jacket
- Cable Grand Explosion-proof approved

DIMENSIONS

Capacity Range : 0.5, 1 ,2 tf

Capacity Range : 3, 5 tf

Unit : mm

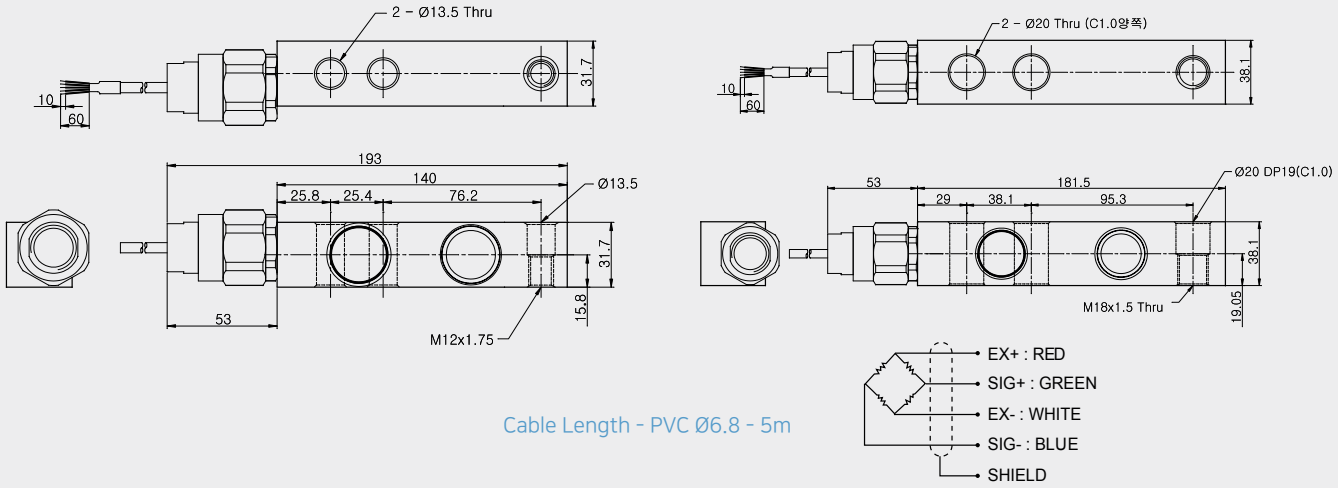

Cable Length - PVC Ø6.8 - 5m

SPECIFICATIONS

Max. Capacity		kgf	0.5, 1, 2, 3, 5 tf
Rated output		mV/V	2.0 ± 0.005
Zero balance		mV/V	0.0 ± 0.02
Combined error		%RO	0.03
Repeatability		%RO	0.01
Creep (30min.)		%RO	0.03
Temperature effect on			
	Zero value	%RO/10℃	0.028
	Output value	%RO/10℃	0.014
Excitation			
	Recommended	V	10
	Maximum	V	15
Resistance			
	Input	Ω	350 ± 3.5
	Output	Ω	350 ± 3.5
	Insulation	MΩ	>2,000
Compensated temp. range		℃	-10 ~ +40
Operating temp. range		℃	-20 ~ +80

• Specifications are subject to change without notice