ANYLOAD

106KS

Stainless Steel

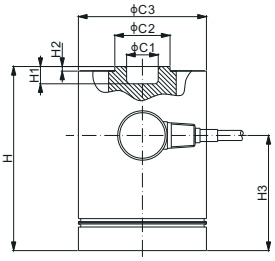

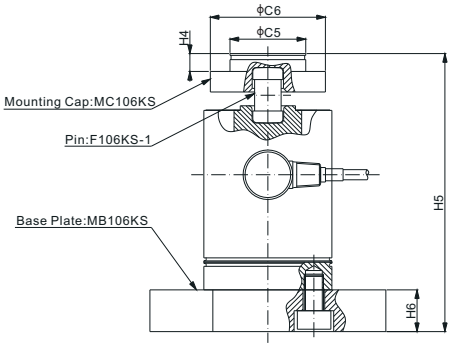

RoHS

Mounting hardware to be ordered separately.

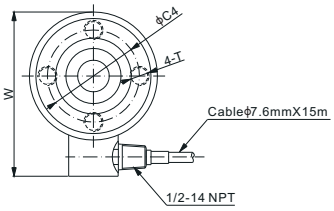

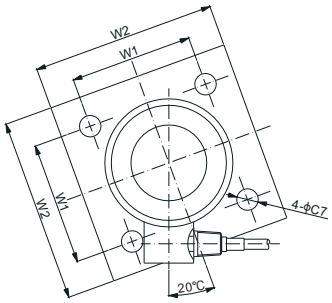

- Material of MC106KS & F106KS-1 is 17-4PH stainless steel;
- Material of MB106KS is 304 stainless steel

DIMENSIONS

RATED CAPACITY	C1	C2	C3	C4	C5	C6	C7	H	H1	H2	H3	H4	H5	H6	W	W1	W2	T
Klb/inches																		
50	1.03	1.80	4.17	3.00	2.47	3.75	0.70	6.00	0.56	0.15	3.75	0.58	9.70	2.00	5.35	4.00	6.00	5/8-18 UNF Depth13
100	1.54	2.28	5.51	4.00	2.70	3.75	0.82	8.12	0.83	0.20	4.84	0.58	12.71	2.00	6.69	6.00	8.00	3/4-16 UNF Depth20
kg/mm (conversion of above dimensions)																		
22,679.6	26.2	45.7	106.0	76.2	62.7	95.3	17.8	152.4	14.3	3.8	95.3	14.8	246.4	50.8	136.0	101.6	152.4	5/8-18 UNF Depth0.5
45,359.2	39.0	57.9	140.0	101.6	68.6	95.3	20.8	206.2	21.0	5.1	123.0	14.8	322.8	50.8	170.0	152.4	203.2	3/4-16 UNF Depth0.8

SPECIFICATIONS

Full Scale Output	2.0 mV/V ± 0.25%	**Recommended Excitation**	10V (15V Maximum)
Zero Balance	± 0.02 mV/V	**Insulation Resistance**	>2 [50V DC] GΩ
Non-linearity	< ± 0.050%	**Compensated Temperature Range**	-10°C to 50°C / 14°F to 122°F
Repeatability	< ± 0.010%	**Safe Overload**	150% of full scale
Hysteresis Error	< ± 0.060%	**Breaking Overload**	300% of full scale
Creep in 30 min.	< ± 0.030%	**Seal Type / IP Rating**	Welded Seal / IP68
Input Resistance	700Ω ± 20	**Cable Color Code**	Exc+ Red Exc- Black
Output Resistance	700Ω ± 5		Sig+ Green Sig- White
Element Material	17-4PH Stainless Steel		Shield Bare

PART NUMBER*

Load Cell

Rated Capacity	Part No.	Weight Approx. (kg)
50Klb	106KS-50Klb	6.3
100Klb	106KS-100Klb	13.4

Mounting Hardware

Mounting Hardware	Load Cell Capacity	Part No.	Weight Approx. (kg)
Mounting Cap	50Klb	MC106KS-50Klb	-
	100Klb	MC106KS-100Klb	1.2
Pin	50Klb	F106KS-1-50Klb	-
	100Klb	F106KS-1-100Klb	0.5
Base Plate	50Klb	MB106KS-50Klb	-
	100Klb	MB106KS-100Klb	15.2

INTERCHANGEABLE REFERENCE

Brand	Model
Coti Global	CG-CC22
Mettler-Toledo	B10883600A
Mettler-Toledo	B10887700A
Totalcomp	T752

CANISTERS & DISKS

* ATEX, FM, IECEx approved versions carry the "-Ex" suffix. **www.anyload.com**

© **2024 ANYLOAD V1** dimensions and specifications subject to change without notice

Product Datasheet Disclaimer

All product specifications, statements, information and data (collectively, the "Information") in this catalog or made available elsewhere by ANYLOAD are subject to change. The customer is responsible for checking and verifying the extent to which the Information contained in this publication is applicable to an order at the time the order is placed. All Information given herein is believed to be accurate and reliable, but it is presented without guarantee, warranty, or responsibility of any kind, expressed or implied.

Data listed in the datasheet is produced within controlled laboratory settings and may not be reproduceable without exact replication of all conditions. It is the customer’s responsibility to validate that a particular product with the properties described in the product specifications is suitable for use in their applications. Statements of interchangeability with other manufacturers are based on ANYLOAD's knowledge of product information at the time a publication was made, but are not intended to constitute any warranty concerning the substitutability of an ANYLOAD product with one made by another manufacturer.

Any use of product outside of specifications or any storage or installation inconsistent with product guidance voids and warranty.

The information is intended for use only by customers who have the requisite experience and capability to determine the correct products for their application. Any technical advice inferred from this Information or otherwise provided by ANYLOAD with reference to the use of ANYLOAD's products produces no obligation or liability for the advice given or results obtained.

Although ANYLOAD designs and manufactures its products to the most stringent quality and safety standards, isolated component failures may still occur. Accordingly, customer applications which require a high degree of reliability or safety should employ suitable designs or other safeguards in order to ensure that the failure of an electrical component does not result in a risk of personal injury or property damage.

Unless specifically agreed to in writing, ANYLOAD has not tested or certified its products, services or deliverables for use in high risk applications including medical life support, medical device, direct physical patient contact, water treatment, nuclear facilities, weapon systems, mass and air transportation control, flammable environments, or any other potentially life critical uses. Customer understands and agrees that ANYLOAD makes no assurances that the products, services or deliverables are suitable for any high-risk uses. Under no circumstances does ANYLOAD warrant or guarantee suitability for any customer design or manufacturing process. Although all product－related warnings, cautions and notes must be observed, the customer should not assume that all safety measures are indicted or that other measures may not be required. Please contact authorized ANYLOAD personnel to obtain special terms and conditions regarding products designed for such applications or otherwise satisfy specific safety requirements.

© 2024 ANYLOAD V1 dimensions and specifications subject to change without notice